客户： **DPL**

REV	DATE	REASON
B	JUL.10,06	CHANGE "J2" CONNECTOR SPEC

PROUDCTION DRAWING

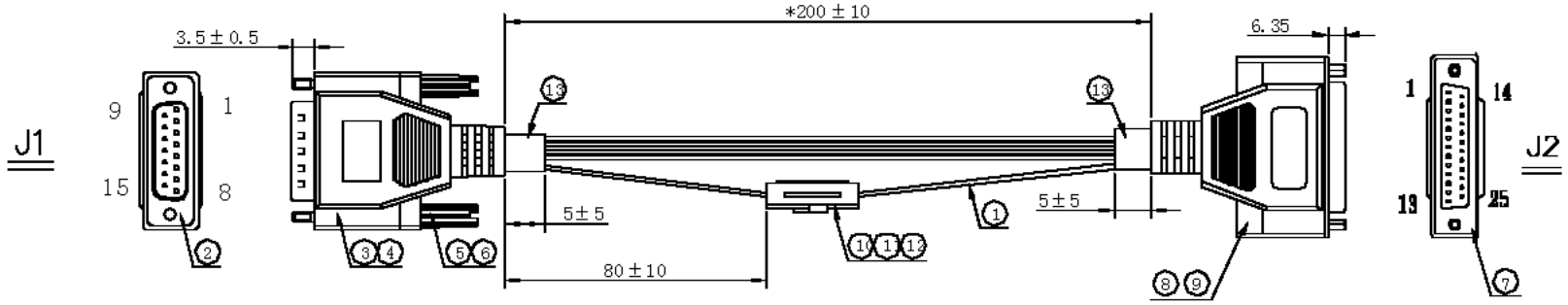

WIRE LIST:

J1	COLOR	J2
1	BLACK	1
2	BROWN	22
5	RED+3A FUSE+RED	10
6	ORANGE	11
9	RED	14
10	YELLOW	3
11	WHITE	21
12	GRAY	23
13	GREEN	9
14	PURPLE	24
15	BLUE	25

NO.	DESCRIPTION		Q'TY	REMARK
13	H.S TUBE	OD: 8.0 UL BLACK L=40mm	2PCS	
12	TERMINAL	JINHUI: J756-BS-2	2PCS	
11	FUSE HOOD	JINHUI: JFU-W756 WHITE	1PC	
10	FUSE	3A FUSE ø6.0*30mm	1PC	
9	OUTER MOLD	T-1102 PVC EY-11#(BLACK) 45P		
8	INNER MOLD	T-2103 PE EY-12#		
7	DB 25F	INSU: BLACK SHELL NICKEL PLATED, WITH NUT*2	1PC	
6	SCREW MOLD	T-3120 PVC EY-11#(BLACK) 15P		
5	SCREW	#4-40 UNC 4*47mm NICKEL PLATED	2PCS	
4	OUTER MOLD	T-1234 PVC EY-11#(BLACK) 45P		
3	INNER MOLD	T-2235 PE EY-12#		
2	DB 15M	INSU: BLACK SHELL NICKEL PLATED	1PC	
1	CABLE	UL1569 22AWG WIRE TINNED COPPER PVC L=300mm COLOR: BLACK; BROWN; RED; ORANGE YELLOW; WHITE; GRAY; GREEN; PURPLE; BLUE	RED: 2PCS OTHER: 1PC	

NOTE:
1. UNIT: mm
2. TEST:
   a. EACH CONDUCTOR MUST PASS CONTINUITY TEST AND SHORT, OPEN, INTERMITTENT, MISWIRING SITUATION OCCUR IS NOT PERMITTED.
   b. THE INSULATION RESISTANCE BETWEEN EACH CONDUCTORS IS 2M OHM MIN
3. WITH RoHS Compliant

3RD ANGLE PROJECTION	SIGNATURE		DATE	L.Q.P. Enterprises Co. Ltd.			
TOLERANCES	DRAWN BY:	华文强	07-20-06		P/N:	CAB 310-200	
DIM: ±5	CHECK BY:						
ANGLE: 5°	BDD APPD.			SCALE: 1:1	UNIT: MM	REV.: A/1	SHEET 1 OF 1

文件编号：

产品规格书

版本/次： A/0